Escola d'Enginyeria de Telecomunicació i Aeroespacial de Castelldefels
UNIVERSITAT POLITÈCNICA DE CATALUNYA

Aerodynamics & Flight Mechanics (AMV)

LESSON 4: TAKE-OFF AND LANDING PERFORMANCES

Adeline de Villardi de Montlaur

Santiago Arias

CONTENTS

LESSON 4: TAKE-OFF AND LANDING PERFORMANCES

INTRODUCTION

Airplane flight mechanics can be divided into 3 broad areas:

Big motions:

- trajectory analysis (performances)

  so far all acceleration = 0: static performance

  study of dynamic performance: take-off, landing runs…

- stability and control

Small motions:

- aeroelasticity

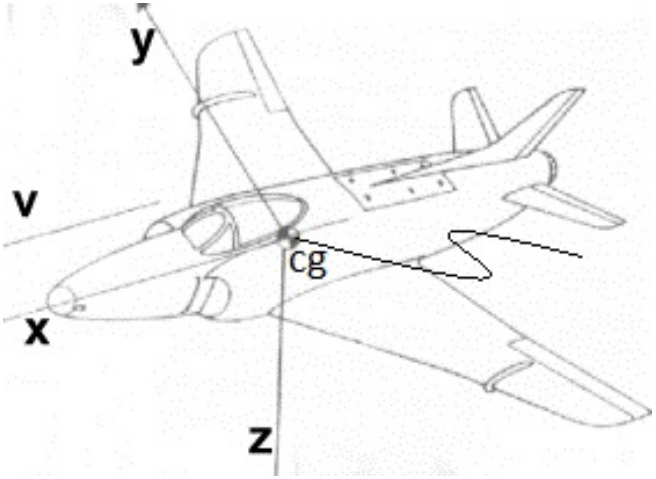

INTRODUCTION

• Take-off performance: ground roll (with all wheels & only main gear) + air path (transition + stabilized straight ascent)

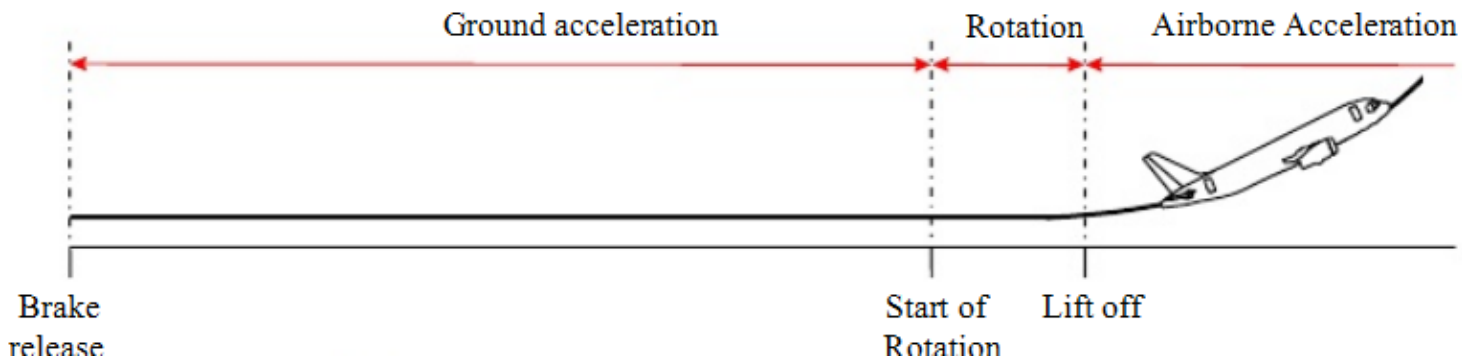

• what is the **running length along the ground** required by an airplane, starting from zero velocity, to gain flight speed and lift from the ground?

→ this length = ground roll or lift-off (LO or LOF subscript) distance, x_{LOF}

• Hypothesis: symmetric aircraft, longitudinal movement only, thrust can often be considered constant and (generally) maximum or close to its maximum value

INTRODUCTION

Total take-off distance (from the release of brakes until reaching a defined height and speed defined by the Federal Aviation Requirements FAR) = x_{LOF} + distance to clear a 35-ft height (for jet-powered civilian transport) or a 50-ft height (for all other airplanes)

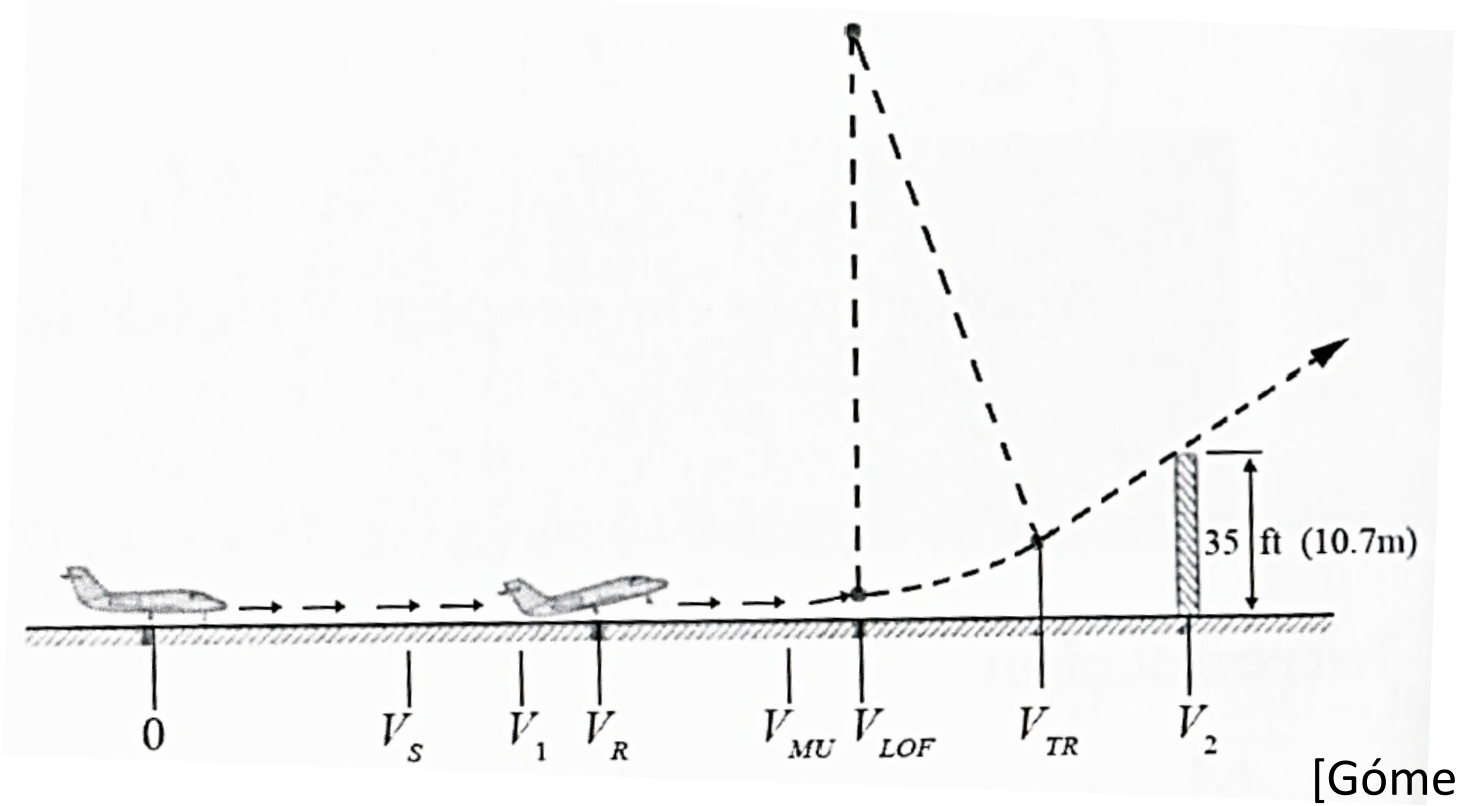

[Gómez, 2012]

INTRODUCTION

Hypothesis: Thrust parallel to the runway axis, horizontal runway

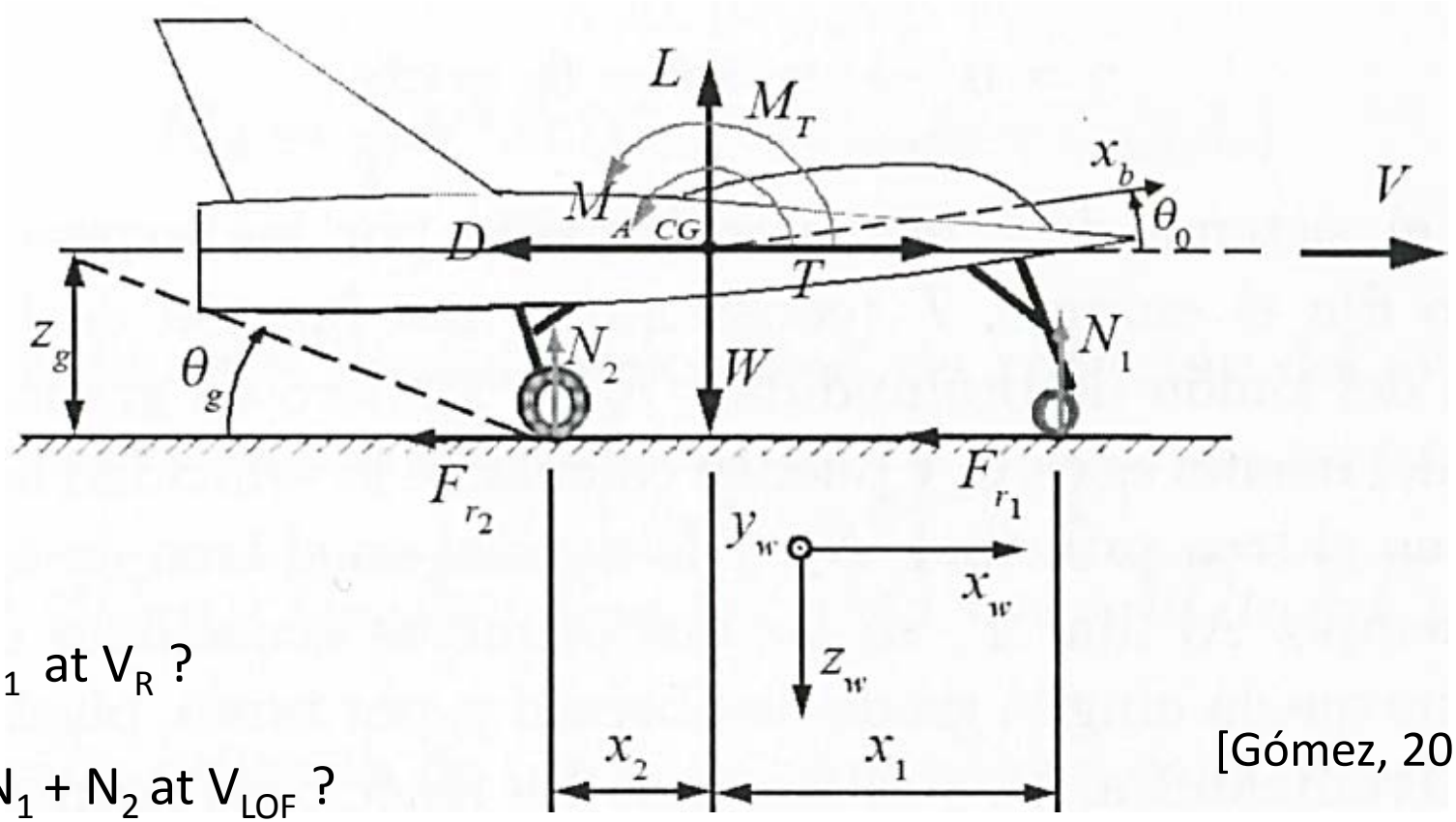

→ N_1 at V_R ?

→ $N_1 + N_2$ at V_{LOF} ?

[Gómez, 2012]

1. GROUND ROLL DURING TAKE-OFF

a. With all wheels on the ground

$$ma_1 = F = T - \mu W - \left({}^{1}/_{2}\,\rho S V^2 (C_D - \mu C_L)\right)$$

With constant pitch angle = constant angle of attack → **constant C_D, C_L**

b. With main landing gear on the ground

$$ma_2 = F = T - \mu W - \left({}^{1}/_{2}\,\rho S V^2 \left(C_D(\alpha) - \mu C_L(\alpha)\right)\right)$$

With increasing pitch angle = increasing α → **non-constant C_D, C_L**

c. Distance and time spent in ground rolling

Could be obtained by integration using that $dx = Vdt = {}^{VdV}/_{a}$

→ $x_{LOF} = \int_0^{x_{LOF}} dx = \int_0^{V_{LOF}} \frac{VdV}{a}$: not easy for non-constant C_D, C_L

1. GROUND ROLL DURING TAKE-OFF

Remark: Ground effect

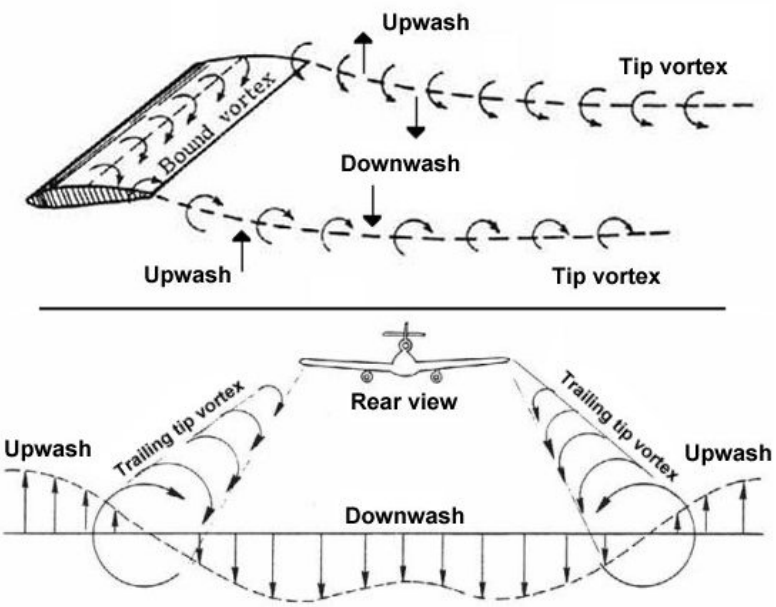

Wing tip vortices diminished because of the interaction with the ground

→ downwash reduced

→ induced drag reduced

→ C_D and C_L different than the ones in the air

- Ekranoplan

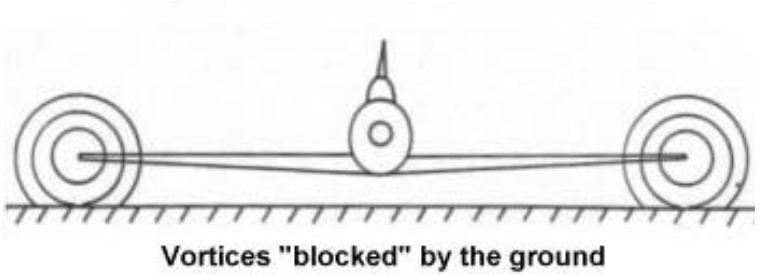

(see on Atenea "Caspian Sea Monster Ekranoplan Flight Video")

1. GROUND ROLL DURING TAKE-OFF

Remark: Ground effect

Tendency for an airplane to “float” above the ground near the instant of landing.

Reduced drag accounted for Φ: $C_D = C_{D0} + \phi \dfrac{C_L^{\,2}}{\pi A e}$

Approximate expression for based on aerodynamic theory:

$$\phi = \frac{\left(16h/b\right)^2}{1+\left(16h/b\right)^2}$$

[McCormick, 1979]

where h: height of the wing above the ground

and b: wingspan

1. GROUND ROLL DURING TAKE-OFF

Ground roll can also and more easily be obtained **approximatively** using a series of hypothesis:

→ suppose aircraft has a uniformly accelerated movement driven by a constant averaged force:

$$F_{LO} = T - \left[D + \mu\left(W - L\right)\right]_{av} = T - \left[D + \mu\left(W - L\right)\right]_{0.7V_{LOF}}$$

→ average force set equal to its instantaneous value at a velocity equal to $0.7V_{LOF}$ [Shevell, 1983]

→ typically, suppose V_{LOF} is stall speed at take-off configuration + 10% security margin (ex. FAR 25 requirements):

$$\boxed{V_{LOF} = 1.1V_S = 1.1\sqrt{\frac{2W}{\rho S C_{Lmax}}}}$$

1. GROUND ROLL DURING TAKE-OFF

Typical variation of forces acting on an airplane during take-off:

Under these hypothesis:

$$x_{LO} = \frac{V_{LOF}^2 W}{2gF_{LO}}$$

and

$$t_{LO} = \frac{V_{LOF} W}{gF_{LO}} = \sqrt{\frac{2x_{LO} W}{gF_{LO}}}$$

Proof: see exercise 1 (Atenea)

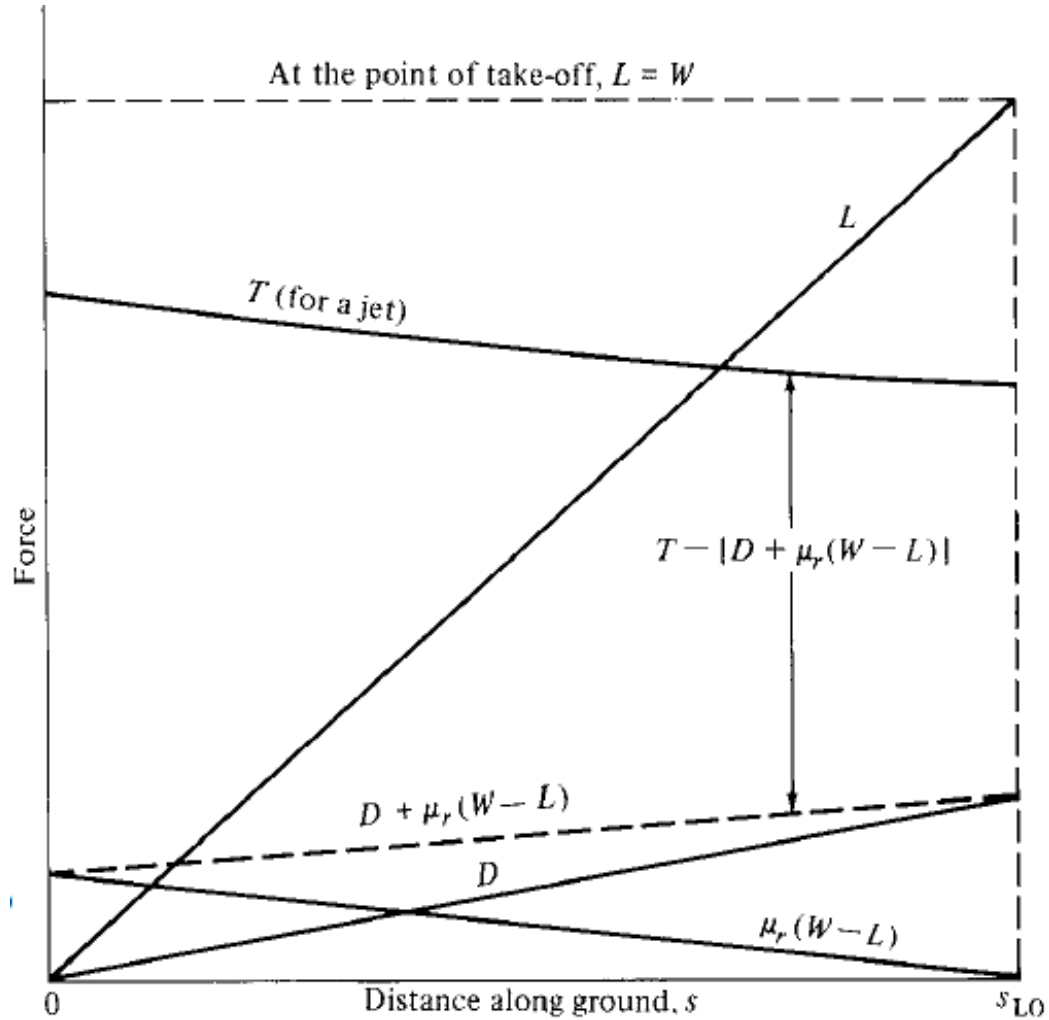

[Anderson, 2005]

1. GROUND ROLL DURING TAKE-OFF

Estimated ground roll lift-off distance:

$$\boxed{x_{LO} = \frac{V_{LOF}^2 W}{2gF_{LO,0.7V_{LOF}}} = \frac{V_{LOF}{}^2 W}{2g\left(T - \left[D + \mu\left(W - L\right)\right]_{0.7V_{LOF}}\right)}}$$

with:

$$V_{LOF} = 1.1\sqrt{\frac{2W}{\rho S C_{Lmax}}}$$

You may **sometimes** consider that $T >> \left[D + \mu\left(W - L\right)\right]$

and thus simplify the ground roll distance as $x_{LO} = \frac{V_{LOF}{}^2 W}{2gT}$

- x_{LO} very sensitive to weight of airplane, varying directly as W^2
- $V_{LOF}^2 \propto 1/\rho$, and (recall lecture #3) $T \propto \rho^x \rightarrow x_{LO} \propto \frac{1}{\rho^{1+x}}$
- x_{LO} decreased by increasing: wing area, $C_{L,max}$, and thrust
- μ usually varies from 0.02 (smooth paved surface) to 0.10 (grass field)

2. TAKE-OFF

Hypothesis: For V_{LOF} calculation, small pitch angle → vertical component of Thrust << other forces

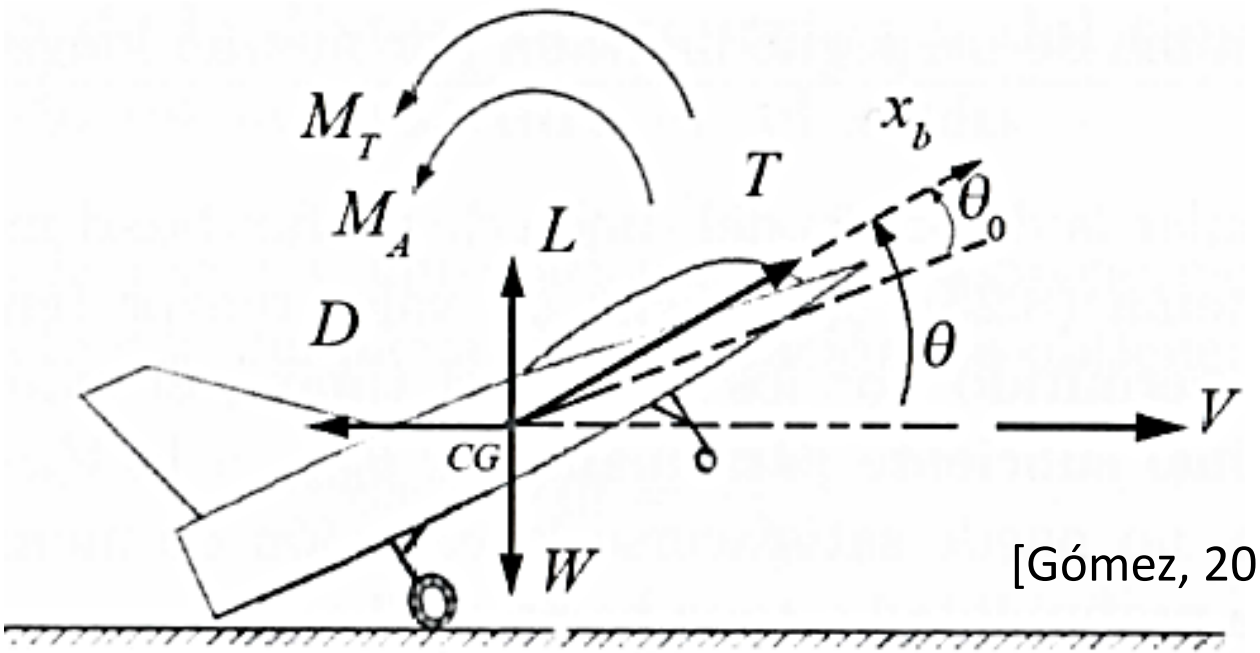

[Gómez, 2012]

But for Minimum Unstick velocity (V_{MU}): high pitch angle → vertical component of Thrust similar to other forces → high pitch angle determines V_{MU} (see on Atenea video of Airbus A380 Tail Strike Test with "the other" Fernando Alonso)

(Suppose Thrust along body axis and V parallel to runway)

3. AIR PATH DURING TAKE-OFF

Horizontal distance during air path obtained adding distances from:

a. Transition (circular trajectory)

b. Stabilized straight ascent

see equations studied in previous flight mechanics lectures

4. LANDING PERFORMANCES

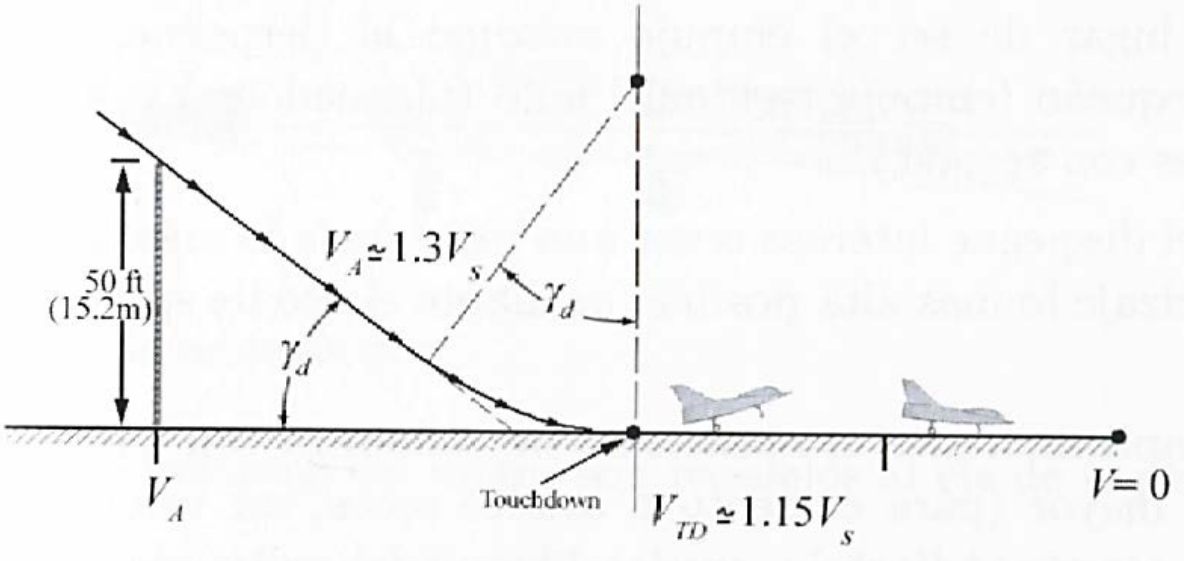

[Gómez, 2012]

Two main phases:

1. in the air: final approach & rounding until touchdown

2. ground roll: with only main gear & with all wheels

Again, distances can be obtained: exactly by integration or approximatively using a series of hypothesis

4. LANDING PERFORMANCES

Same force diagram during ground roll as take-off but instantaneous acceleration is negative

- thrust: **T~ 0** or negative (thrust reverser: 40-60% of max T)

(see video on Atenea "C-17 Globemaster III Reverse Thrust Stunt – Short")

- equation of motion $\boxed{[-T]} - D - \mu(W - L) = m\dfrac{dV}{dt}$

→ Suppose aircraft has a uniformly accelerated movement driven by a constant force set equal to its instantaneous value at a velocity equal to $0.7V_{TD}$: $F_L = -[D + \mu(W - L)]_{av} = -[D + \mu(W - L)]_{0.7V_{TD}}$

→ Typically, suppose V_{TD} is stall speed at landing configuration + 15% security margin: $V_{TD} = 1.15V_{stall} = 1.15\sqrt{\dfrac{2W}{\rho S C_{L,max}}}$

4. LANDING PERFORMANCES

Under these hypothesis: (with convention that $F_L<0$)

$$x_L = -\frac{V_{TD}^2 W}{2gF_L} \text{ and } t_L = -\frac{V_{TD} W}{gF_L} = \sqrt{\frac{2x_L W}{g(-F_L)}}$$

we obtain the estimated landing ground roll distance between touchdown and complete stop:

$$\boxed{x_L = \frac{V_{TD}{}^2 W}{2g\left[D + \mu(W - L)\right]_{0.7V_{TD}}}}$$

with :

$$V_{TD} = 1.15\sqrt{\frac{2W}{\rho S C_{L,max}}}$$

- pilot applies brakes: $\mu \sim 0.4$ for paved surface
- spoilers "break" lift and increase drag
- modern jet transports use thrust reversal during the landing ground roll

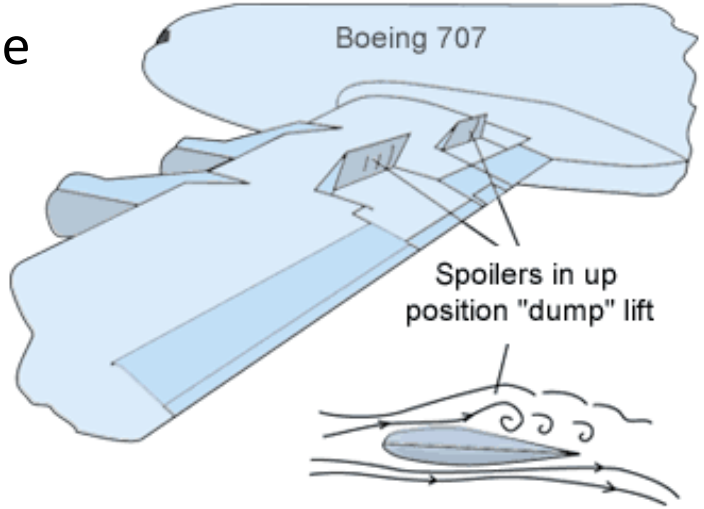

REFERENCES

- *Aircraft Performance and Design*, J. Anderson, Mc Graw-Hill, New York, 1999
- *Introduction to Flight*, J. Anderson, Fifth Edition, Mc Graw-Hill, New York, 2005
- *Mecánica del vuelo*, M.A. Gómez Tierno, M. Pérez Cortés, C. Puentes Márquez, 2ª Edición, Garceta, 2012
- *Aerodynamics, Aeronautics and Flight Mechanics*, B. W. McCormick, Wiley, New York, 1979
- *Fundamentals of Flight*, R. S. Shevell, Prentice-Hall, Englewood Cliffs, NJ, 1983